THIS DRAWING CONTAINS INFORMATION PROPRIETARY TO RF INDUSTRIES,
ANY UNAUTHORIZED USE OF THIS DRAWING IS EXPRESSLY PROHIBITED
WITHOUT WRITTEN PERMISSION FROM RF INDUSTRIES.
ANY VIOLATION IS PUNISHABLE UNDER U.S. COPYRIGHT LAWS.

PART NO. **RFU-503**

| REV | DESCRIPTION | DWN | DATE | APPROVED |
|---|---|---|---|---|
| A | ENGINEERING RELEASE | CJ | 9/30/92 | J. BENZ |
| B | CHANGE CLAMP DIMENSIONS ON PAGE 2 OF 2 | PB | 7/13/93 | K.HARTMANN |
| C | CHANGE DIM THROUGHOUT / UPDATE DWG | CZS | 8/30/99 | R. RICE |
| D | CHANGE STRIPPING DIMENSIONS / CHANGE DWG # FROM 7734 | CZS | 08/12/00 | JDMc |

ALL DIMENSIONS ARE REFERENCE ONLY

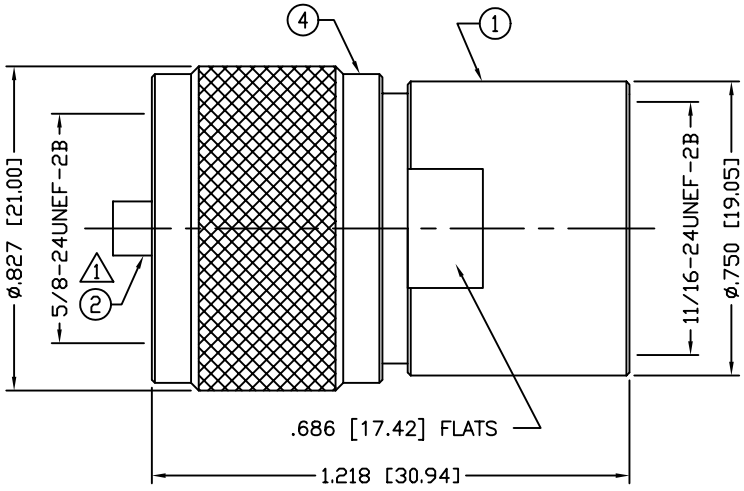


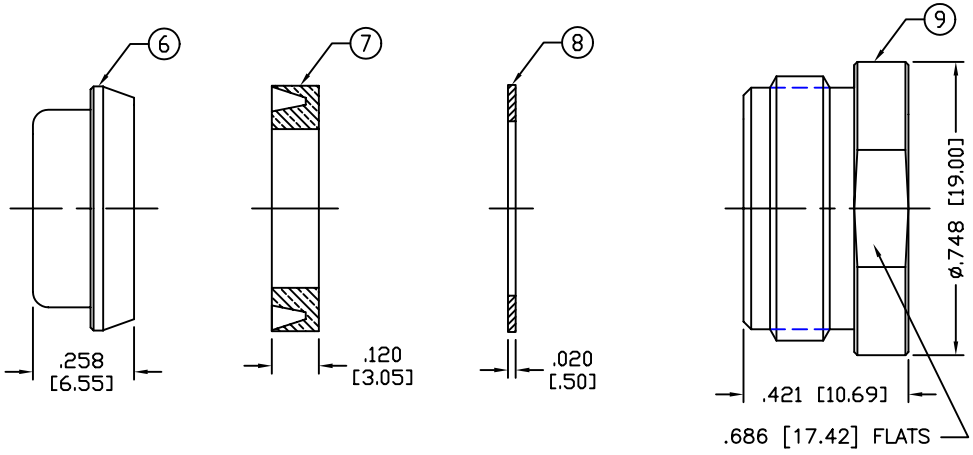


1 SOLDER ONLY IF USING STRANDED CENTER CONDUCTOR.
CRIMP OR SOLDER IF USING SOLID.

SCALE 2:1

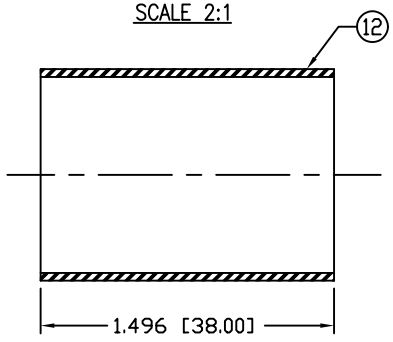


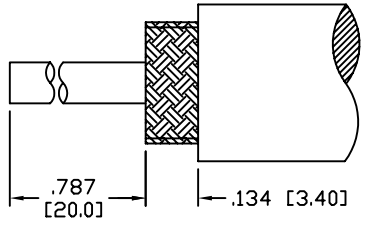


RECOMMENDED STRIPPING INSTRUCTIONS

## SPECIFICATIONS:

IMPEDANCE: NON CONSTANT
FREQUENCY RANGE: 0–300 MHz
WORKING VOLTAGE: 500 V rms max. @ sea level
(E) FOR RG–8, 8A, 213/U, ALPHA 9008, 9213, BELDEN 8267, 9251, 9880, 89880, INTERCOMP 4085, 22132, TIMES AA–4478
(F) FOR RG–9, 9A, 9B, 214 & 393/U, BELDEN 8242 & 8268 CABLE
(I) FOR BELDEN 8214, 9913, 9913F, 9914, RG–8/U TYPE, CAROL C1180, TIMES AA–5886 & LMR–400 CABLE

| # | DESCRIPTION | QTY | MATERIAL | FINISH |
|---|---|---|---|---|
| 1 | BODY | 1 | BRASS | NICKEL, 80μ" |
| 2 | CONTACT | 1 | BRASS | SILVER, 5μ" |
| 3 | INSULATOR | 1 | PTFE | --- |
| 4 | SHELL | 1 | BRASS | NICKEL, 80μ" |
| 5 | PRESS WASHER | 1 | BRASS | NICKEL, 80μ" |
| 6 | CLAMP | 1 | BRASS | NICKEL, 80μ" |
| 7 | GASKET | 1 | RUBBER | --- |
| 8 | WASHER | 1 | BRASS | NICKEL, 80μ" |
| 9 | BACK NUT | 1 | BRASS | NICKEL, 80μ" |
| 10 | GASKET | 1 | RUBBER | --- |
| 11 | RETAINING RING | 1 | BRASS | NICKEL, 80μ" |
| 12 | TUBING | 1 | HEAT SHRINK | --- |
| 13 | | | | |
| 14 | | | | |

000486

| APPROVALS | DATE |
|---|---|
| DRAWN C. ZUNIGA | 11/10/04 |
| CHECKED | |
| ORJ DRAWN C. ZUNIGA | 9/30/92 |

UNLESS OTHERWISE SPECIFIED:

DIMENSIONS ARE IN INCHES AND [MILLIMETERS]
UNLESS OTHERWISE NOTED TOLERANCES ARE:
DECIMALS | DIAMETER

RF connectors
DIVISION OF RF INDUSTRIES, LTD.
7610 MIRAMAR RD
SAN DIEGO, CA 92126
(858) 549–6340
(858) 549–6345 FAX

# UHF PLUG, CLAMP

WATERPROOF

| SIZE | CABLE GROUP | DWG NO. | REV |
|---|---|---|---|
| A | E, F & I | RFU–503 | D |

SCALE: NTS | CAD FILE OUTLINE | SHEET 1 OF 1