THIS DRAWING CONTAINS INFORMATION PROPRIETARY TO RF INDUSTRIES,
ANY UNAUTHORIZED USE OF THIS DRAWING IS EXPRESSLY PROHIBITED
WITHOUT WRITTEN PERMISSION FROM RF INDUSTRIES.
ANY VIOLATION IS PUNISHABLE UNDER U.S. COPYRIGHT LAWS.

ALL DIMENSIONS ARE REFERENCE ONLY

PART NO. **RSB-220-1-179**

REV	DESCRIPTION	DWN	DATE	APPROVED
–	ENGINEERING RELEASE	CZS	8/4/00	JDMc
A	CHANGE SPECS & ADD CRIMP DIE	GGG	4/8/02	JDMc
B	CHANGE PLATING CALLOUT	CZS	08/30/07	JDMc

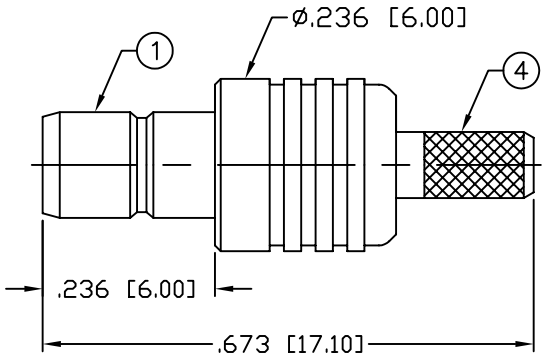

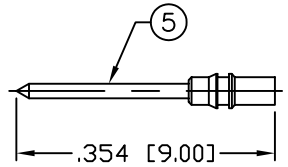

RECOMMENDED SOLDER CRIMP W/RFA-4089

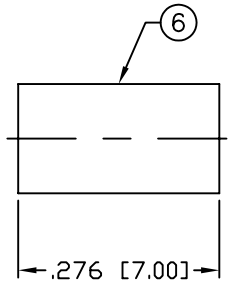

RECOMMENDED CRIMP DIE: .130"

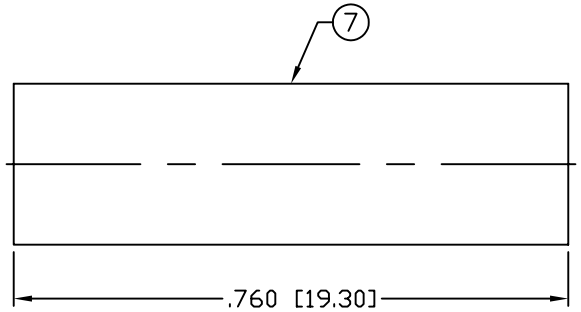

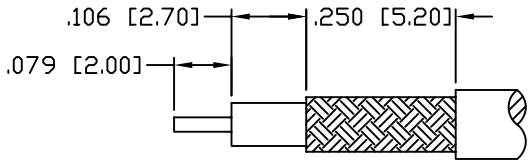

RECOMMENDED STRIPPING DIMENSIONS

SPECIFICATIONS:

IMPEDANCE: 75 Ohms
FREQUENCY RANGE: 0–2 GHz
WORKING VOLTAGE: 335 V rms Max. @ Sea Level
CONTACT RESISTANCE: ≤ 6 m Ohm
INSULATION RESISTANCE: 1k M Ohms min.
TEMPERATURE RANGE: –65°C TO 165°C

#	DESCRIPTION	QTY	MATRL	FINISH
1	BODY	1	BRASS	GOLD, 3μ"
2	INSULATOR	1	PTFE	---
3	INSULATOR	1	PTFE	---
4	FERRULE STUD	1	BRASS	GOLD, 3μ"
5	CONTACT	1	BRASS	GOLD, 30μ"
6	FERRULE	1	COPPER	GOLD, 3μ"
7	TUBING	1	HEAT SHRINK	---
8				
9				
10				
11				
12				
13				
14				

008974

APPROVALS	DATE
DRAWN C. ZUNIGA	08/30/07
CHECKED	
ORJ DRAWN C. ZUNIGA	8/12/98

UNLESS OTHERWISE SPECIFIED:

1. REMOVE ALL BURRS
2. BREAK ALL CORNERS & EDGES .005 R. MAX.
3. CHAMFER 1ST & LAST THREADS 45°
4. SURFACE ROUGHNESS 63 FINISH MIL-STD-10
5. DIAMETERS ON COMMON CENTERS TO BE CONCENTRIC WITHIN .002 T.I.R.
6. ALL DIMENSIONS ARE AFTER PLATING.

DIMENSIONS ARE IN INCHES AND [MILLIMETERS]
UNLESS OTHERWISE NOTED TOLERANCES ARE:

DECIMALS	DIAMETER
.XXX±.003 [.08]	.XXX±.001 [.03]
.XX±.005 [.13]	.XX±.003 [.08]

RF connectors
DIVISION OF RF INDUSTRIES, LTD.
7610 MIRAMAR RD
SAN DIEGO,CA 92126
(858) 549-6340
(858) 549-6345 FAX

MINI SMB JACK, CRIMP

75 OHM

SIZE	CABLE GROUP	DWG NO.	REV
A	N/A	RSB-220-1-179	B

SCALE: NTS | CAD FILE OUTLINE | SHEET 1 OF 1