THIS DRAWING CONTAINS INFORMATION PROPRIETARY TO RF INDUSTRIES,
ANY UNAUTHORIZED USE OF THIS DRAWING IS EXPRESSLY PROHIBITED
WITHOUT WRITTEN PERMISSION FROM RF INDUSTRIES.
ANY VIOLATION IS PUNISHABLE UNDER U.S. COPYRIGHT LAWS.

ALL DIMENSIONS ARE REFERENCE ONLY

PART NO. **RFE-6105**

REV	DESCRIPTION	DWN	DATE	APPROVED
–	ENGINEERING RELEASE	CZS	7/10/00	CZ

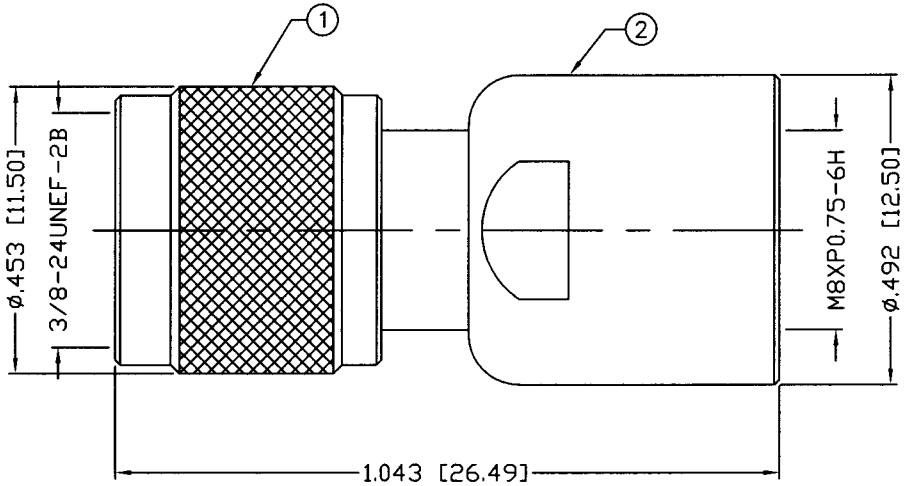

SPECIFICATIONS:

IMPEDANCE: 50 Ohms
FREQUENCY RANGE: 0–2 GHz
WORKING VOLTAGE: 335 Vrms
TEMPERATURE RANGE: –65°C TO +85°C

#	DESCRIPTION	QTY	MATERIAL	FINISH
1	SHELL	1	BRASS	NICKEL, 100μ"
2	BODY	1	BRASS	NICKEL, 100μ"
3	INSULATOR	1	DELRIN	---
4	PIN	1	BRASS	GOLD, 3μ"
5	RETAINING RING	1	SUS 304	---
6				
7				
8				
9				
10				
11				
12				
13				
14				

008974

APPROVALS	DATE
DRAWN C. ZUNIGA	6/9/04
CHECKED	6/9/04
ORJ DRAWN C. ZUNIGA	6/9/04

UNLESS OTHERWISE SPECIFIED:

DIMENSIONS ARE IN INCHES AND [MILLIMETERS]
UNLESS OTHERWISE NOTED TOLERANCES ARE:
DECIMALS | DIAMETER

RF connectors
DIVISION OF RF INDUSTRIES, LTD.
7610 MIRAMAR RD
SAN DIEGO, CA 92126
(858) 549–6340
(858) 549–6345 FAX

FME PLUG TO MINI UHF PLUG

SIZE	CABLE GROUP	DWG NO.	REV
A	N/A	RFE–6105	—

SCALE: NTS | CAD FILE OUTLINE | SHEET 1 OF 1