THIS DRAWING CONTAINS INFORMATION PROPRIETARY TO RF INDUSTRIES.
ANY UNAUTHORIZED USE OF THIS DRAWING IS EXPRESSLY PROHIBITED
WITHOUT WRITTEN PERMISSION FROM RF INDUSTRIES.
ANY VIOLATION IS PUNISHABLE UNDER U.S. COPYRIGHT LAWS.

PART NO. **RF35F-35F-00000**

REV	DESCRIPTION	DWN	DATE	APPROVED
–	ENGINEERING RELEASE	JDM	5/26/00	JDMc
A	MODIFIED MATERIAL NOTE	JDM	12/9/05	JDMc

SPECIFICATIONS:

IMPEDANCE RANGE: 50 Ohms
FREQUENCY RANGE: DC to 34 GHz
VSWR: 1.04 + .006 f (f=GHz) Max. DC–34 GHz
CONTACT RESISTANCE:
Outer Contact= 2.0 milliohms
Center Contact= 3.0 milliohms
CONNECTOR DURABILITY: 500 Cycles minimum
TEMPERATURE RANGE: –55° C TO 105° C

MATERIALS:
Body and Body Components:
Non–Magnetic stainless steel, per ASTM A582, class 303 condition A.
Contacts: Beryllium copper, per QQ–C–530, heat treated per MIL–H–7199
Insulators: REXOLITE

FINISH:
Center Contacts:
.000050 min. gold per MIL–G–45204B Type II, Grade C, Class 1 over .000050 min. Nickel per QQ–N–290A
Other Metal Parts:
Passivated, (as specified) to meet the finish and corrosion requirements of MIL–C–39012.

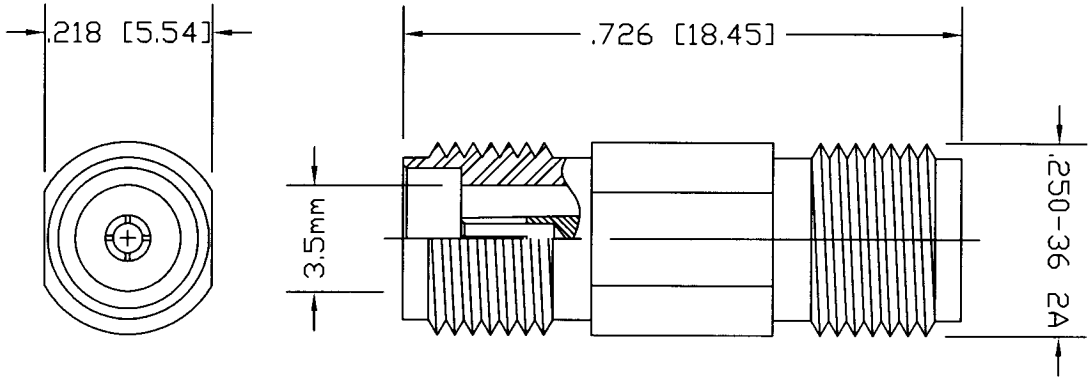

#	PART NO.	QTY	DESCRIPTION	MATRL	PLATE	APPROVALS	DATE
1	001-35F-001-SP	1	BODY	SST.	PASS	00000000	
2	008-35F-001-CG	1	CONTACT	BE.CU.	AU/NI		
3	008-35F-002-CG	1	CONTACT	BE.CU.	AU/NI		
4	025-35X-000-RX	1	BEAD	REX	---	DRAWN D. McREYNOLDS	12/9/05
5	032-35F-000-SP	1	INSERT	SST.	PASS	CHECKED DM	12/9/05
6							
7						ORIG DRAWN JDMc	5/26/00
8							

UNLESS OTHERWISE SPECIFIED:
1. REMOVE ALL BURRS
2. BREAK ALL CORNERS & EDGES .005 R. MAX.
3. CHAMFER 1ST & LAST THREADS 45°
4. SURFACE ROUGHNESS 63 FINISH MIL-STD-10
5. DIAMETERS ON COMMON CENTERS TO BE CONCENTRIC WITHIN .002 T.I.R.
6. ALL DIMENSIONS ARE AFTER PLATING.

DIMENSIONS ARE IN INCHES AND [MILLIMETERS]
UNLESS OTHERWISE NOTED TOLERANCES ARE:

DECIMALS	DIAMETER
.XXX±.003 [.08]	.XXX±.001 [.03]
.XX±.005 [.13]	.XX±.003 [.08]

RF connectors
DIVISION OF RF INDUSTRIES, LTD.
7610 MIRAMAR RD
SAN DIEGO,CA 92126
(619)549–6340
(619)549–6345 FAX

3.5mm, JACK TO JACK

ADAPTER

SIZE	CABLE GROUP	DWG NO.	REV
A		RF35F35F00000	—

SCALE: NTS | CAD FILE ASSEMMBLY | SHEET 1 OF 1